FIXED-BIAS CIRCUIT

BJT DC BIASING

prepared by:

Gyro A. Madrona

Electronics Engineer

GRADING SYSTEM

FINAL GRADE

30%	30%	**40%**
PRELIM	MIDTERM	ENDTERM

TERM GRADE

50%

WEEKLY

50%

EXAM

100%

LABORATORY

PENALTY

0

ABSENT

3

45-min LATE

7 max

15-min LATE

TOPIC OUTLINE

Fixed-Bias Circuit

- Base-Emitter Loop
- Collector-Emitter Loop
- Load Line Analysis

FIXED-BIAS CIRCUIT

Bipolar

"two polarities"

Bipolar Junction Transistor

BJT operation involves the movement of free **electrons** and **holes**

FIXED-BIAS CIRCUIT

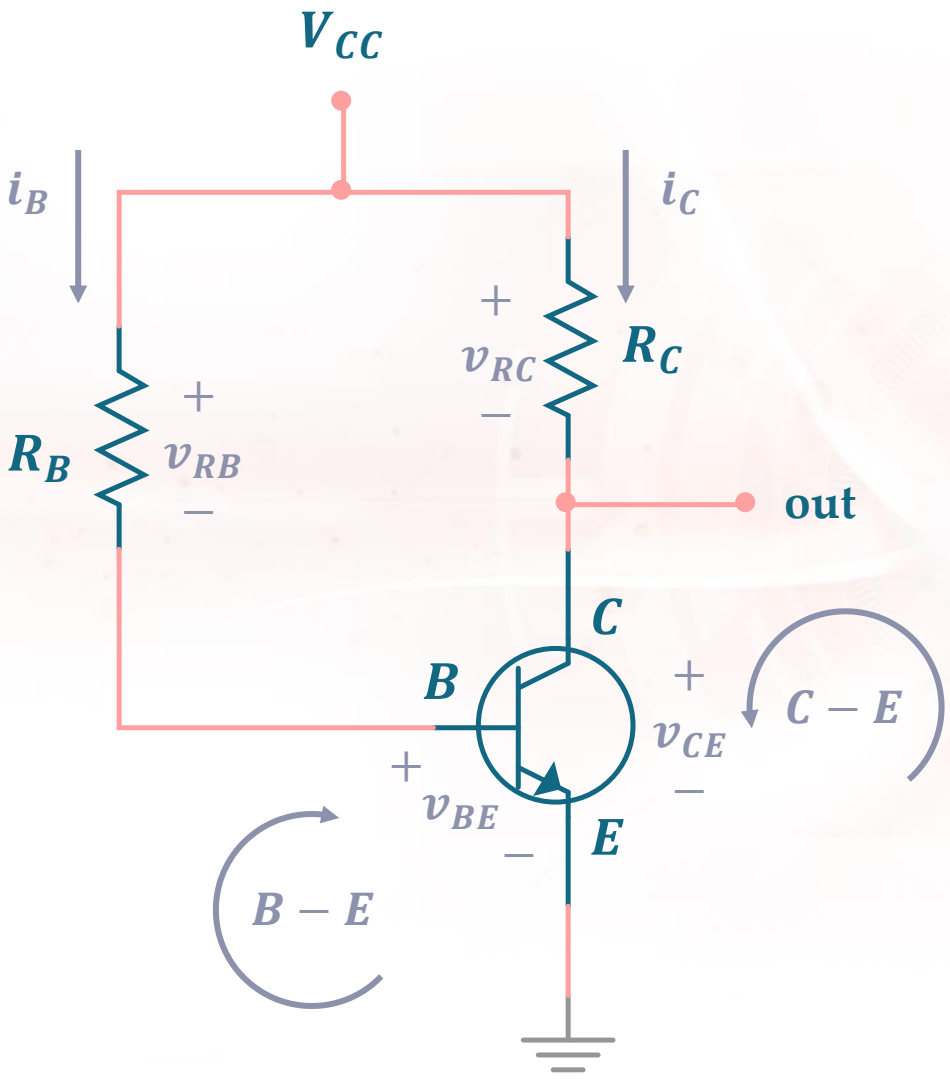

BASE-EMITTER LOOP

KVL @$B - E$,

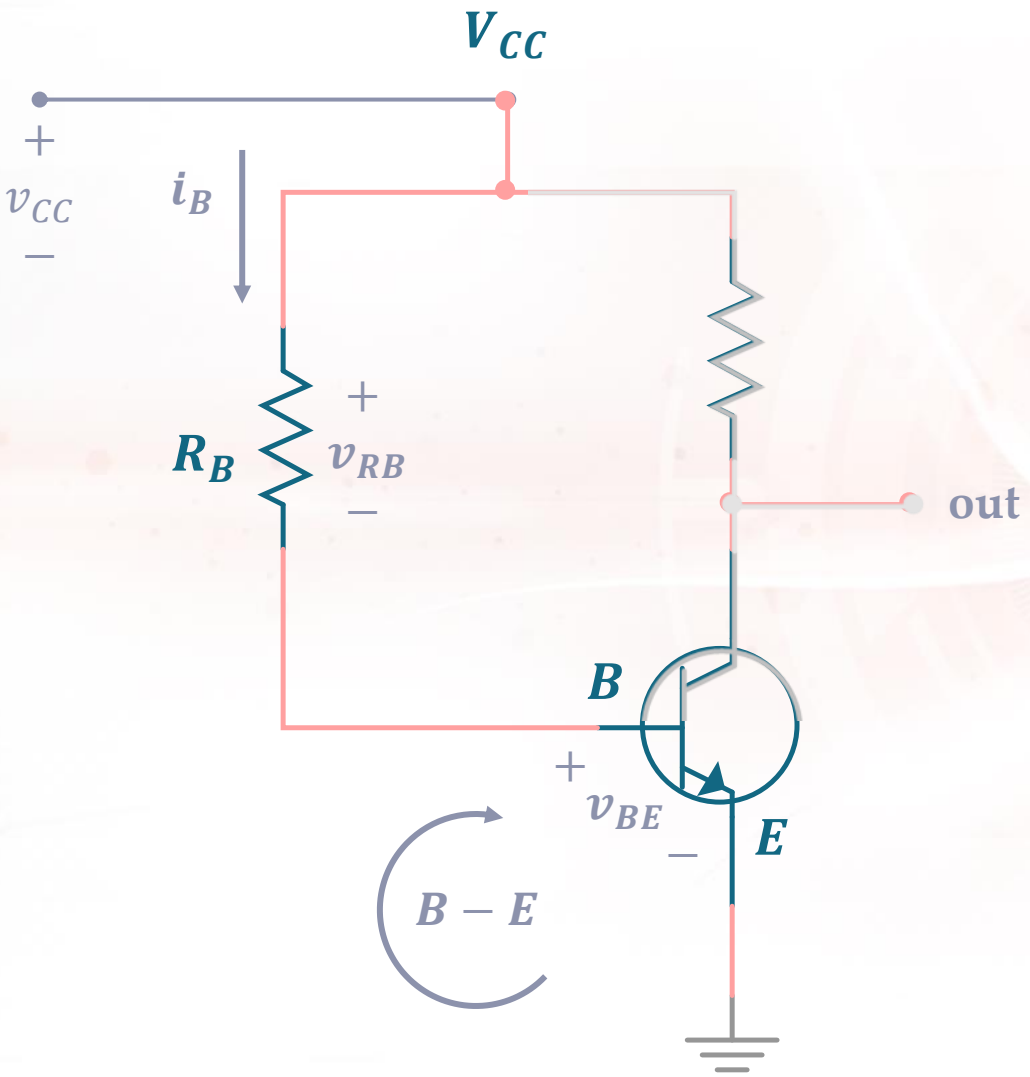

COLLECTOR-EMITTER LOOP

KVL @$C - E$,

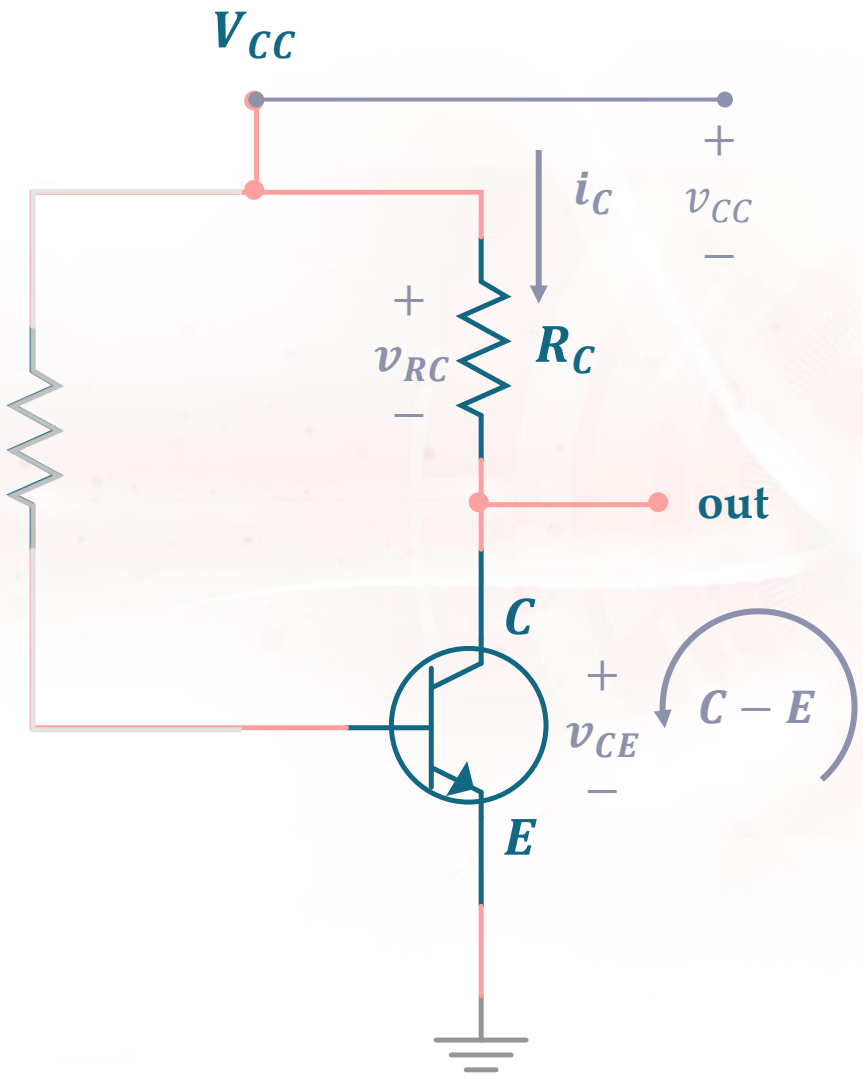

Determine the following for the **fixed-biasing** network :

- Base current, i_{BQ}
- Collector current, i_{CQ}
- Collector-Emitter voltage, v_{CEQ}
- Base voltage, v_B
- Collector voltage, v_C
- Base-Collector voltage, v_{BC}
- Load Line Analysis
  - Saturation current, $i_{C(sat)}$
  - Cutoff voltage, $v_{CE(cutoff)}$

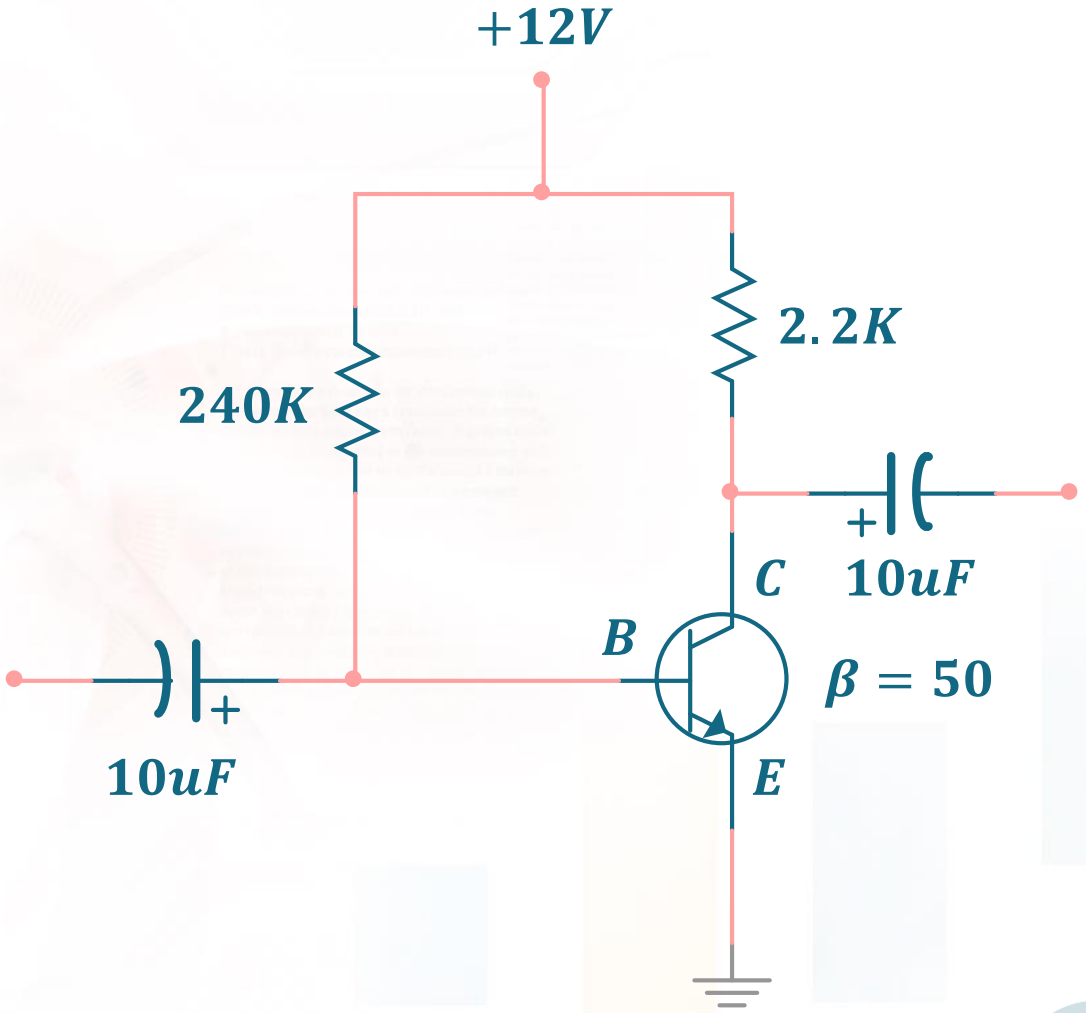

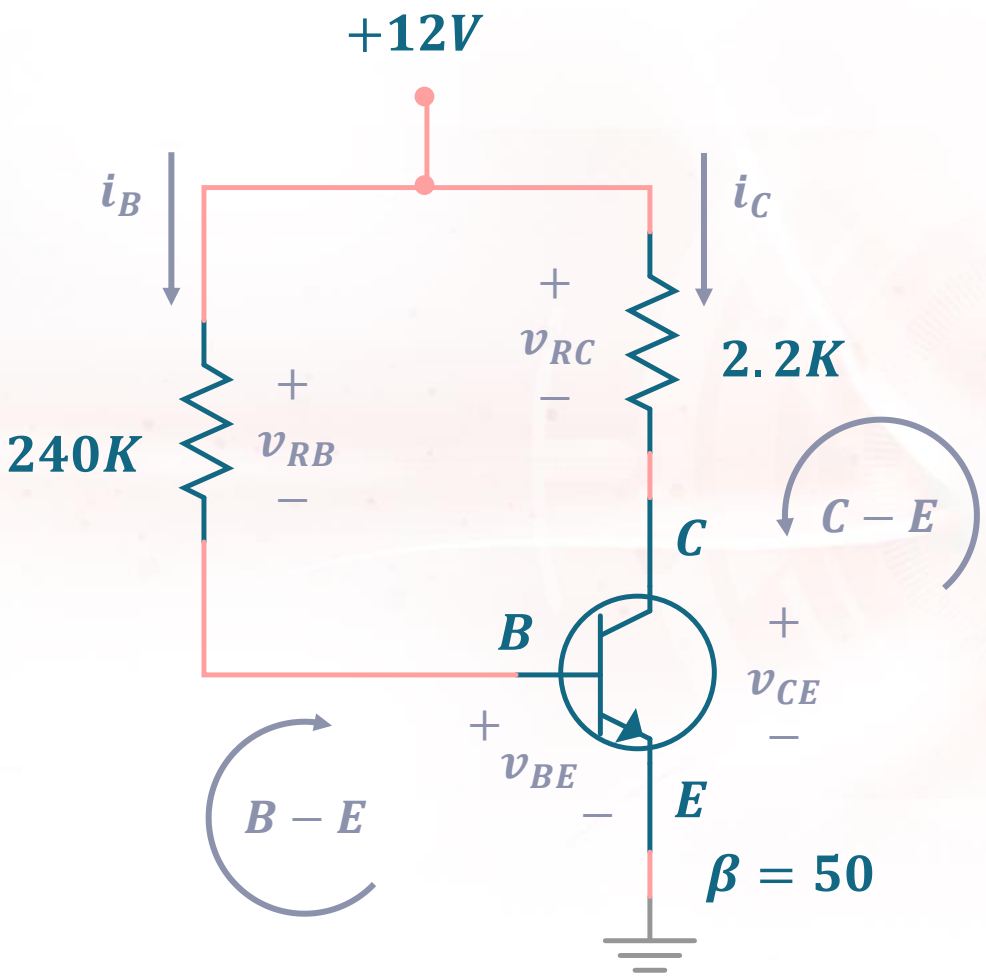
+12V
i_B
i_C
+
v_{RC}
−
2.2K
+
v_{RB}
−
240K
C − E
C
B
+
v_{CE}
−
+
v_{BE}
−
E
B − E
β = 50

Collector Characteristic Curve

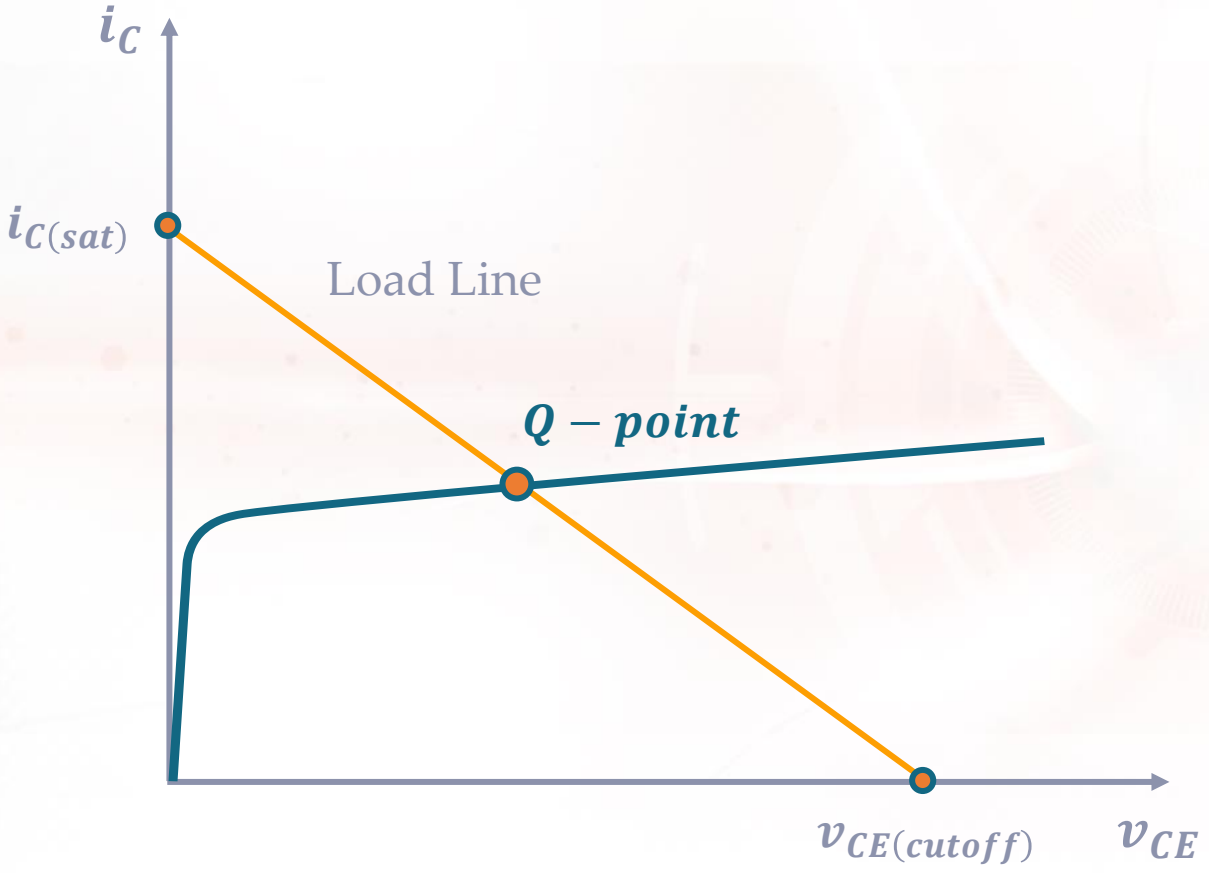

Saturation Point

the maximum possible current

$i_{C(sat)}|v_{CE} = 0$

Cutoff Point

the maximum possible collector-emitter voltage

$v_{CE(cutoff)}|i_C = 0$

Collector Characteristic Curve

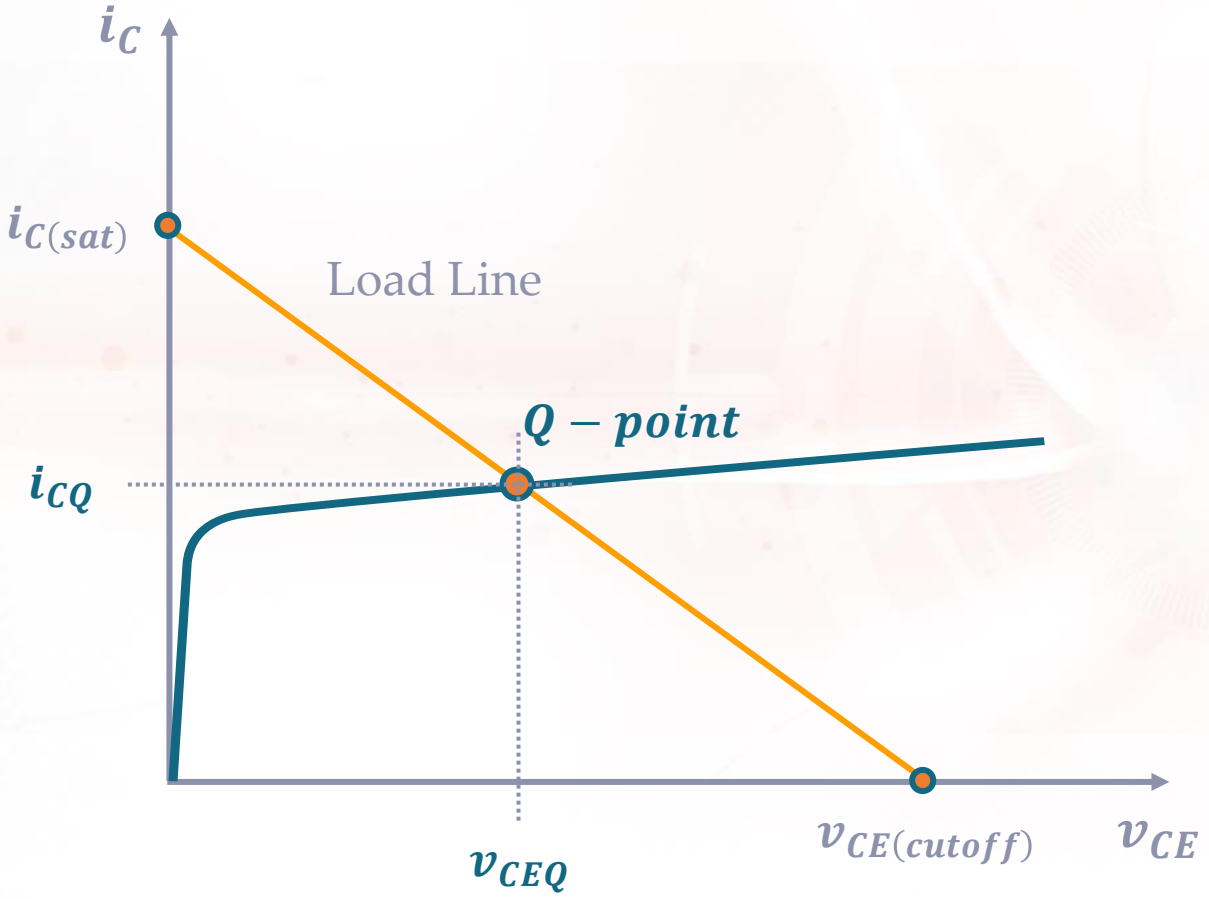

Quiescent Point (Q-point)

The steady-state DC **operating point**, characterized by specific value of collector current, $\boldsymbol{i_C}$ and collector-emitter voltage, $\boldsymbol{v_{CE}}$

SATURATION POINT

Collector Characteristic Curve

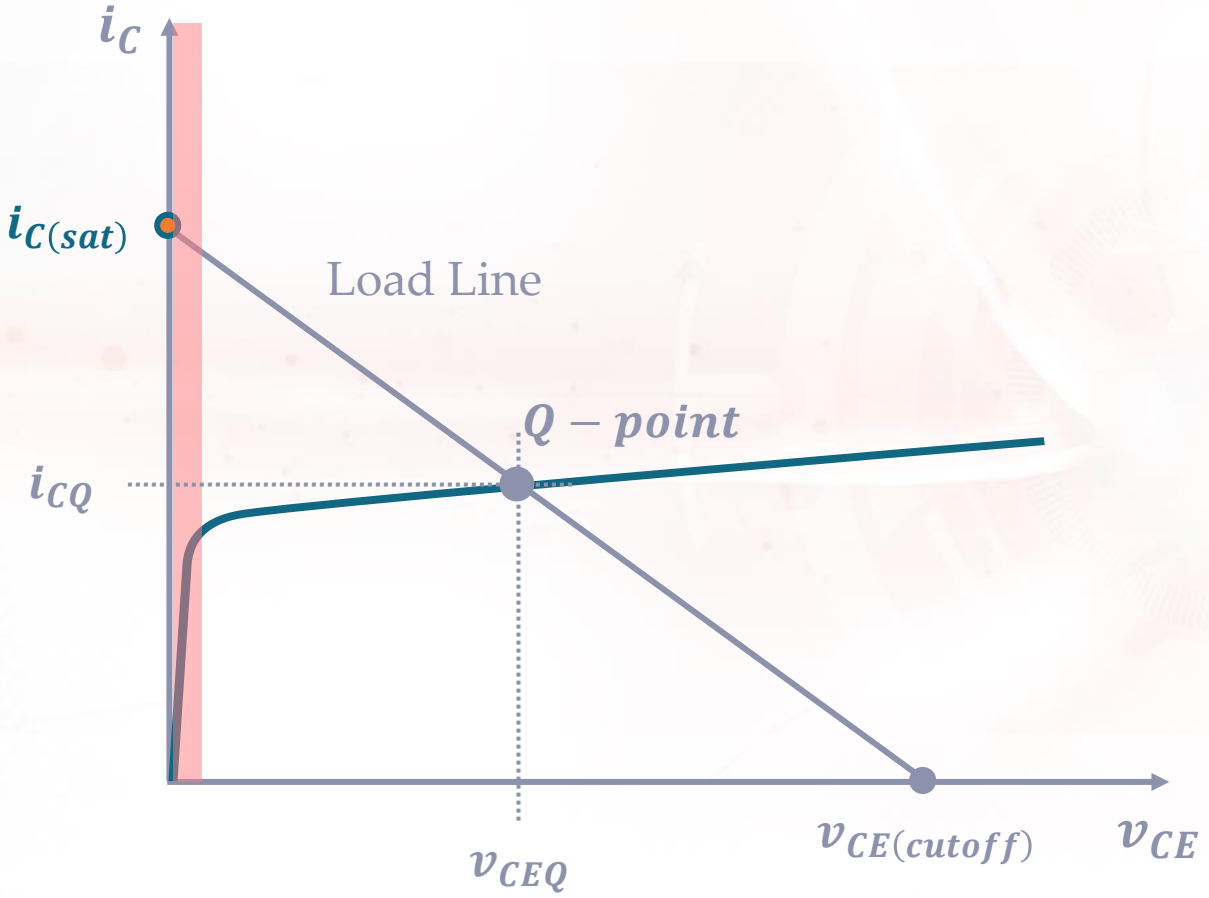

Mental **Short**

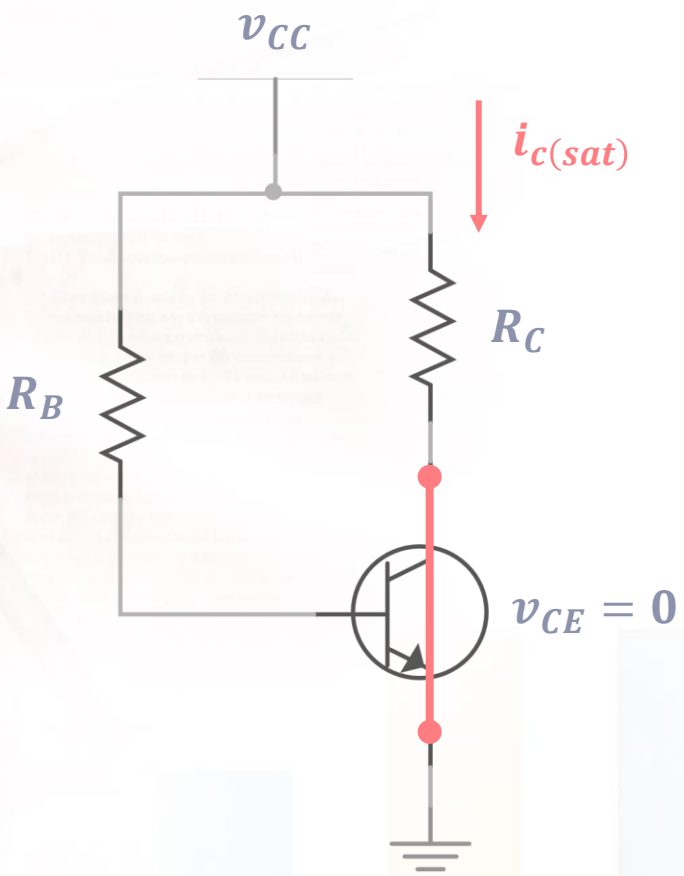

CUTOFF POINT

Collector Characteristic Curve

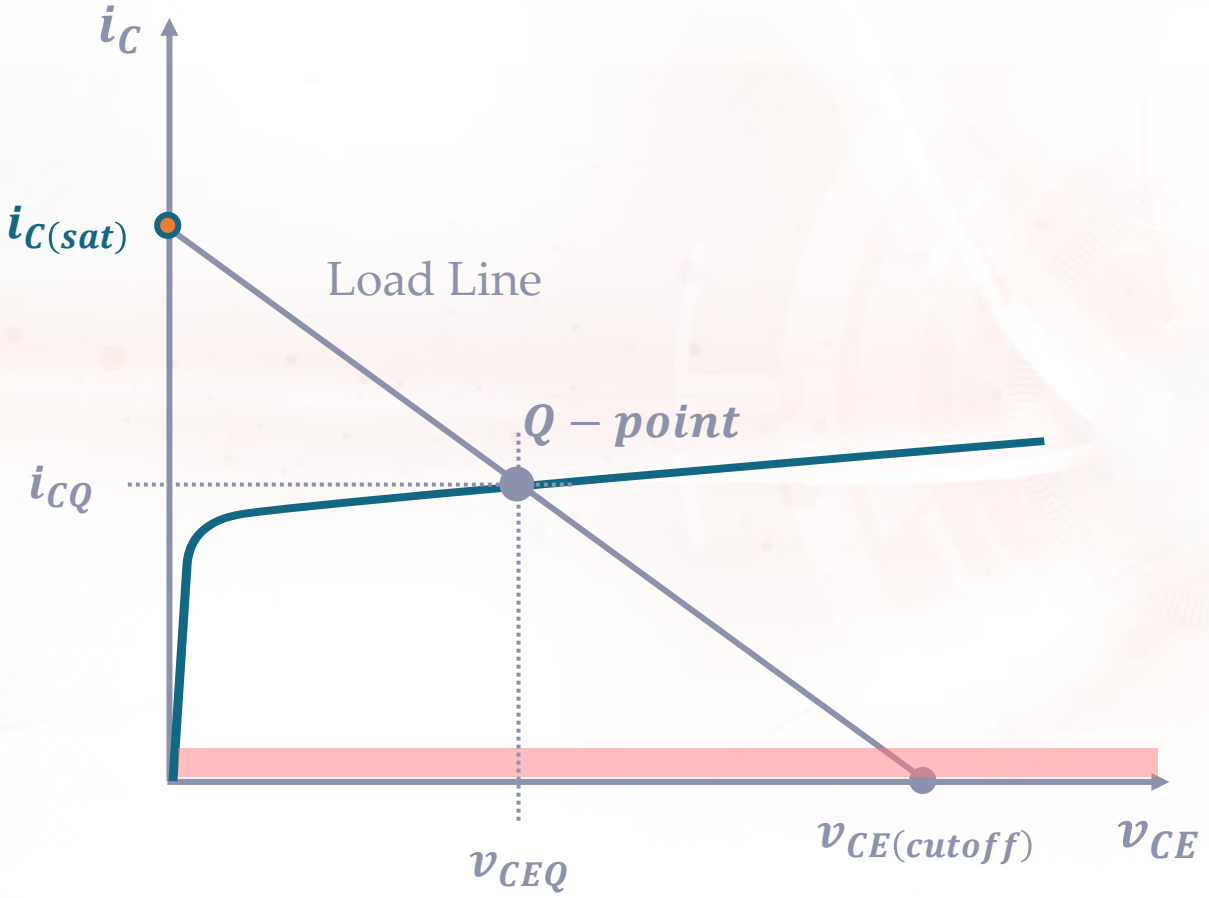

Mental **Open**

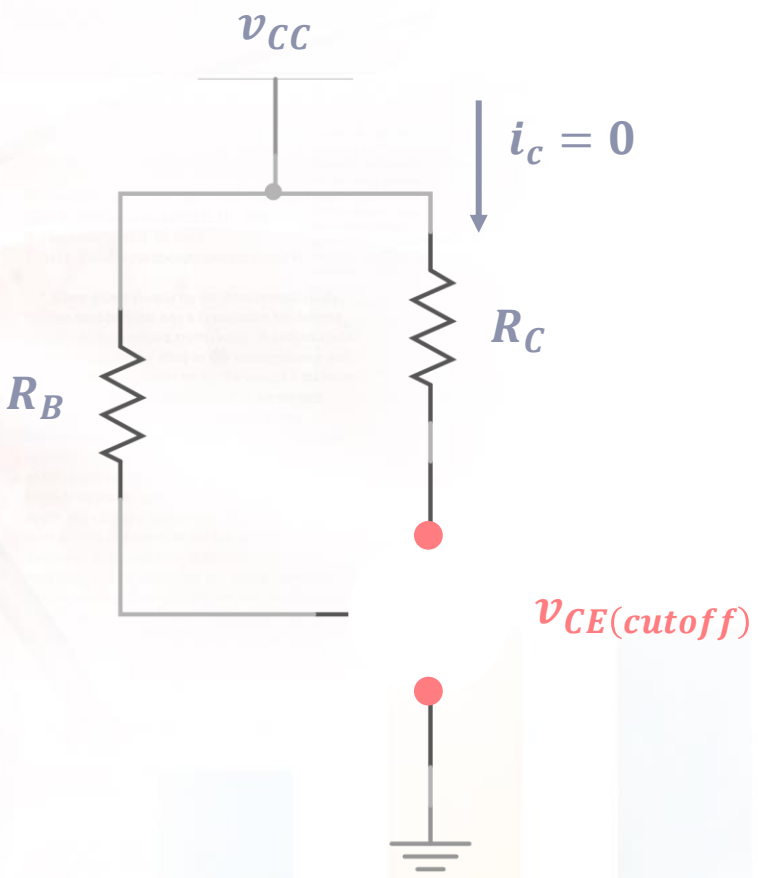

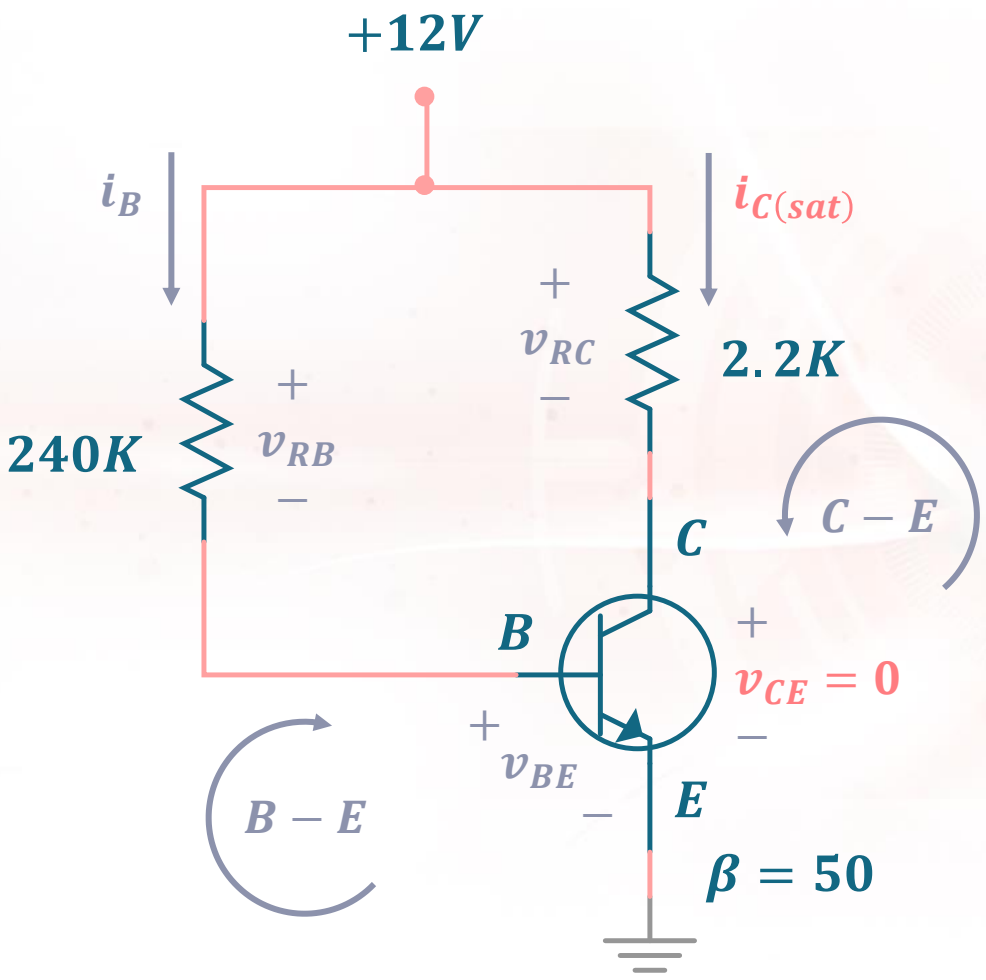
+12V
i_B
$i_{C(sat)}$
+
v_{RC}
−
2.2K
+
240K
v_{RB}
−
C
C − E
B
+
$v_{CE} = 0$
−
+
v_{BE}
−
E
B − E
$\beta = 50$

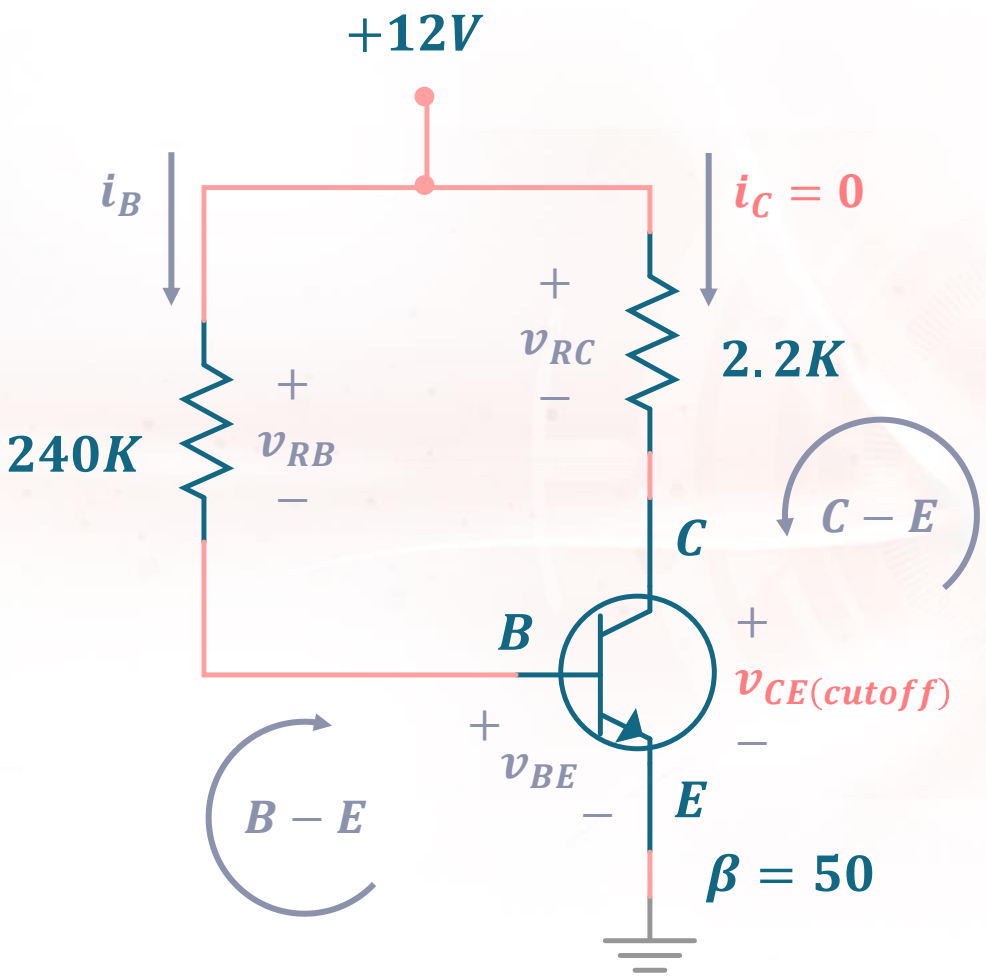
+12V
i_B
$i_C = 0$
+
v_{RC}
−
2.2K
+
240K
v_{RB}
−
C
C − E
B
+
$v_{CE(cutoff)}$
−
+
v_{BE}
−
E
B − E
β = 50

LOAD LINE ANALYSIS

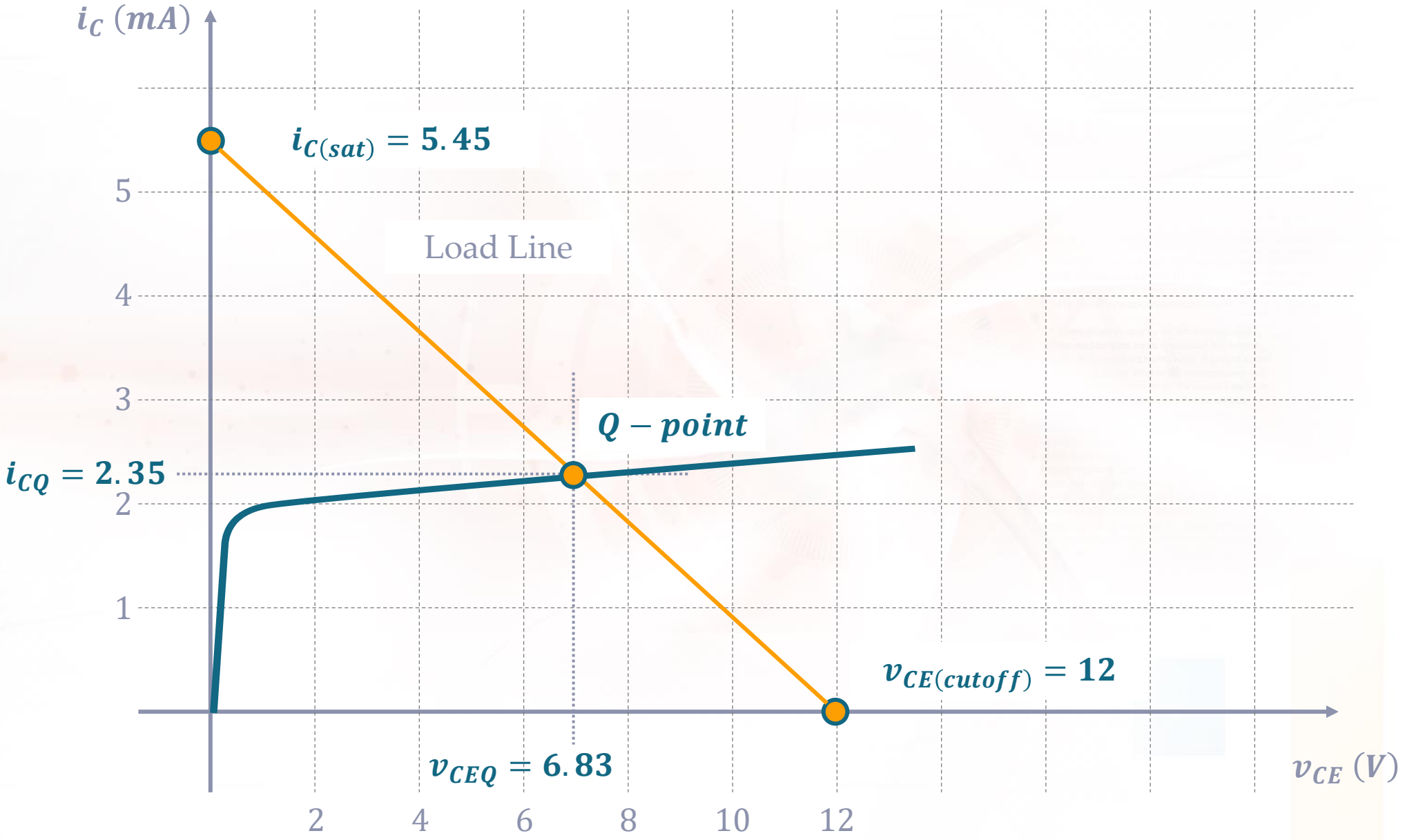

LABORATORY